Homann Designs

EN-009
MB-02V6 Breakout Board to Gecko™ G251 Schematic

Revision 2.3

Copyright © Homann Designs 5th Nov. 2010

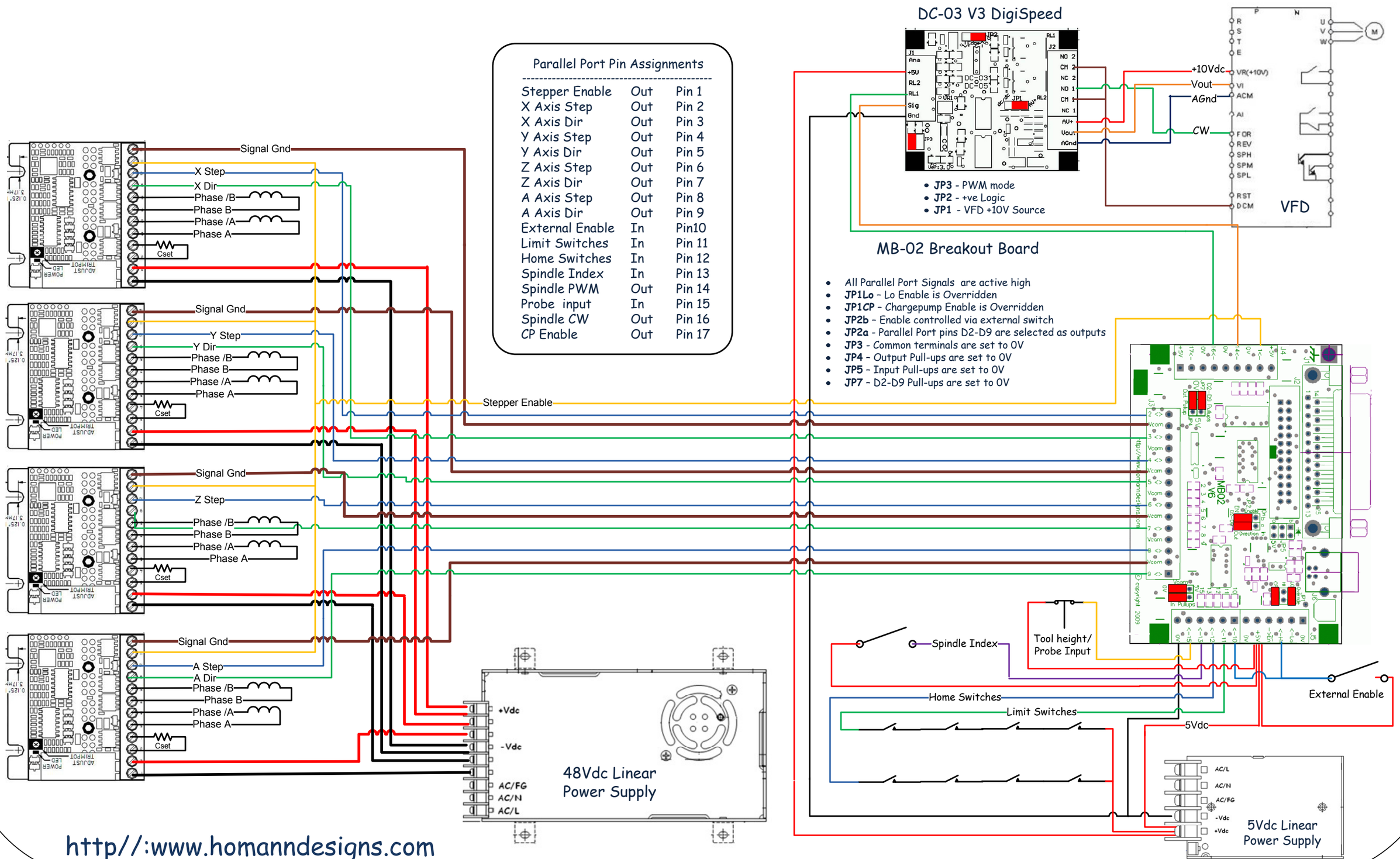

Parallel Port Pin Assignments

Stepper Enable	Out	Pin 1
X Axis Step	Out	Pin 2
X Axis Dir	Out	Pin 3
Y Axis Step	Out	Pin 4
Y Axis Dir	Out	Pin 5
Z Axis Step	Out	Pin 6
Z Axis Dir	Out	Pin 7
A Axis Step	Out	Pin 8
A Axis Dir	Out	Pin 9
External Enable	In	Pin10
Limit Switches	In	Pin 11
Home Switches	In	Pin 12
Spindle Index	In	Pin 13
Spindle PWM	Out	Pin 14
Probe input	In	Pin 15
Spindle CW	Out	Pin 16
CP Enable	Out	Pin 17

http//:www.homanndesigns.com