# EN-019

## MB-02V6 Breakout Board to 5-Axis Gecko™ G251

Homann Designs

**Revision 1.0**

Copyright © Homann Designs 5th May 2012

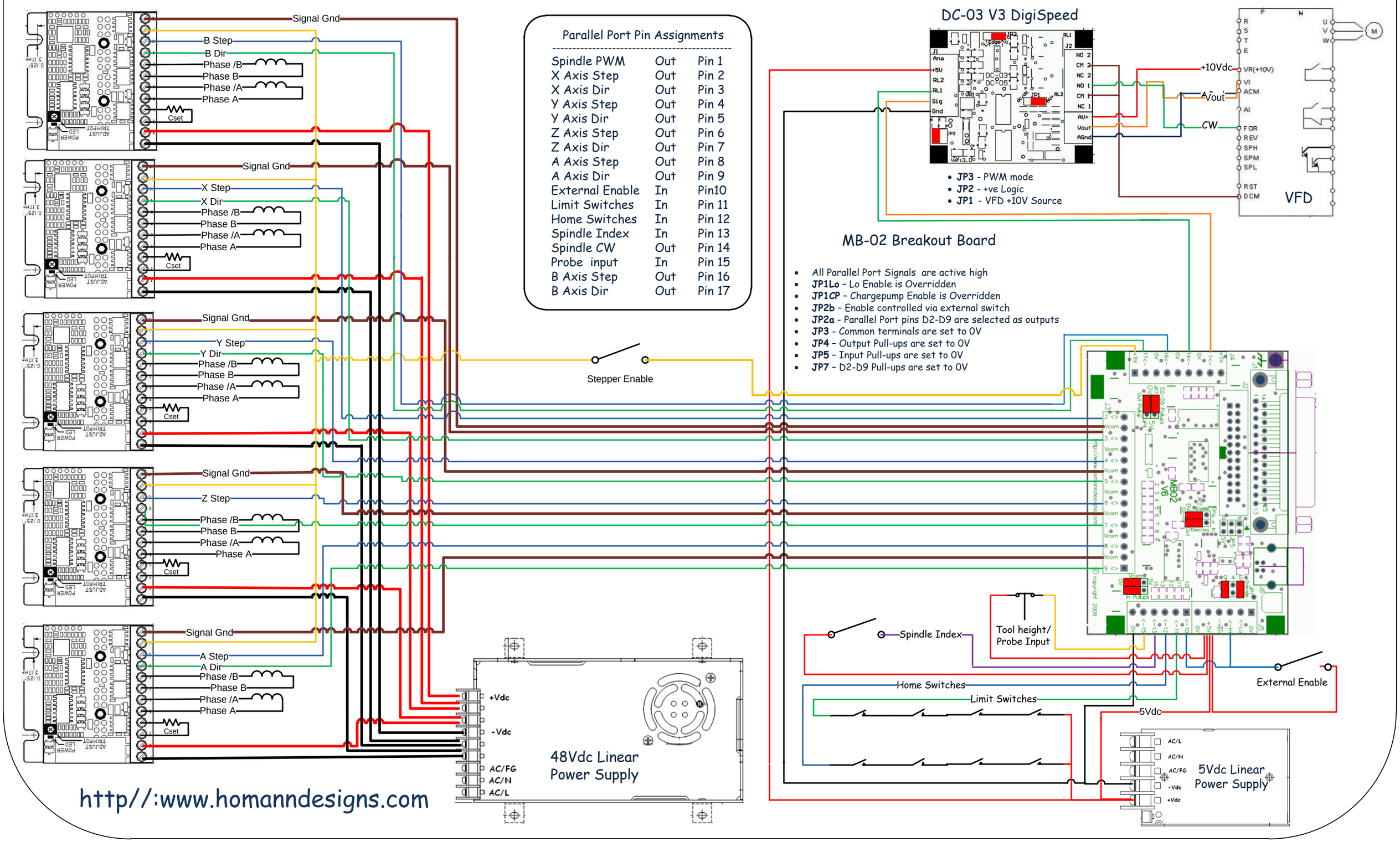


http//:www.homanndesigns.com